AMERICAN TRANSMISSION COMPANY®

Helping to keep the lights on,
businesses running
and communities strong®

Operational Experiences of an HV Transformer Neutral Blocking Device

Michael B. Marz, Principal Transmission Planning Engineer

American Transmission Company

- First multi-state, transmission-only USA utility (2001)
- 69 kV to 345 kV
- >9600 miles of lines
- 548 substations
- Operate Reliably & Plan Economically for Future Load and Generation

Why Did ATC Buy an NBD in 2013?

- Concern About GIC on Our System
  - Northerly Location (Igneous Rock)
  - New Long High Voltage Lines
  - Area Geology (High R Soils)
  - System Discontinuities
  - Results of Previous GMD Study
- Coming Regulations (TPL-007)
  - Improved Analysis Tools and Understanding of System and Equipment Vulnerabilities
  - If a Corrective Action Plan Needed, NBD would be One More Tool Available
- Need to Understand Technology and Application

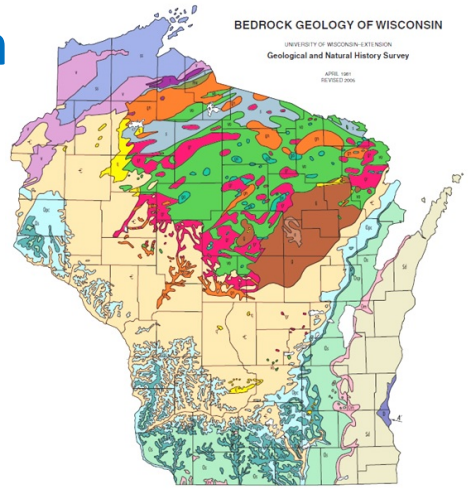

Selecting NBD Substation/Location

- Remote from Generation (Limit GSU Effects)
- Long (160 miles) Radial 345 kV Line Connection
- Only One Transformer at Substation
- Historically High GIC Levels

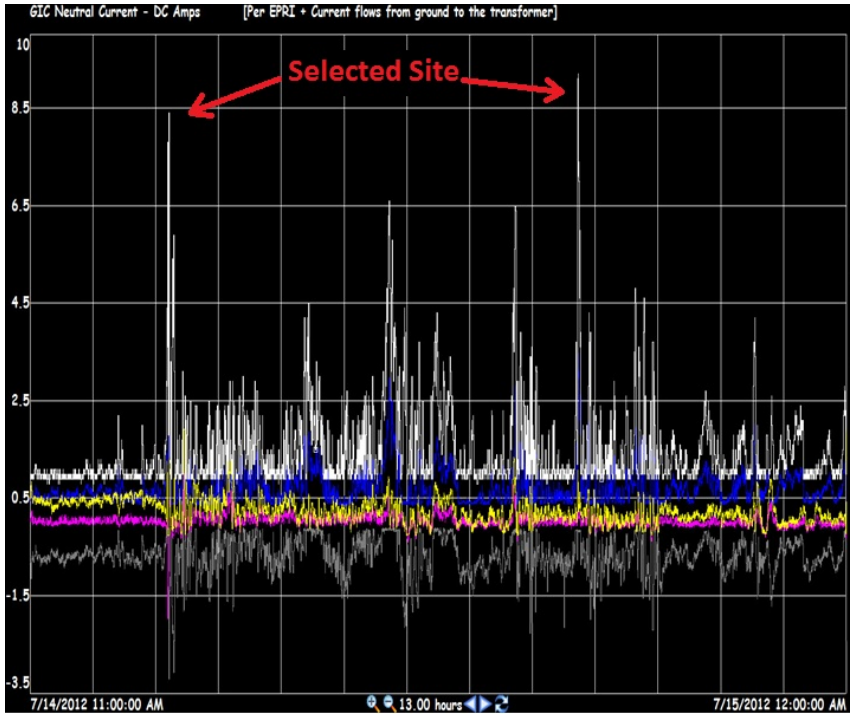

Operational in February 2015

- 25’ from 345/138 kV, 300 MVA Autotransformer
- Connected Between Transformer Neutral & Ground Grid
- Control Signals to Control House and EMS

Bought in 2013 – Operational in 2015

- Bought Prototype, Installed Commercial
  - Operations, Commissioning, Protection, Construction, etc., Input
- Enhancements
  - Voltage Probe
  - Grounding
  - Spark Gap Replaced MOVs
  - Bypass Switch Position Indicators
  - Major and Minor Alarms Defined

Acceptance Testing/Commissioning

- Simulator Used to Validate Software
  - Normal Conditions (Enter/Exit Blocking Mode)
  - Contingencies and Failures Modeled
    - Failed Breakers, Faults, Unbalanced Current, loss of Transformer Neutral, etc.
- Field Tests Confirmed
  - Sensors Properly Connected
  - Control Center Communications
- Operated In Automatic Response Mode

EMS View of the NBD

- Operators Monitor, But Don't Activate
- ATC Monitors Transformer Neutral Currents

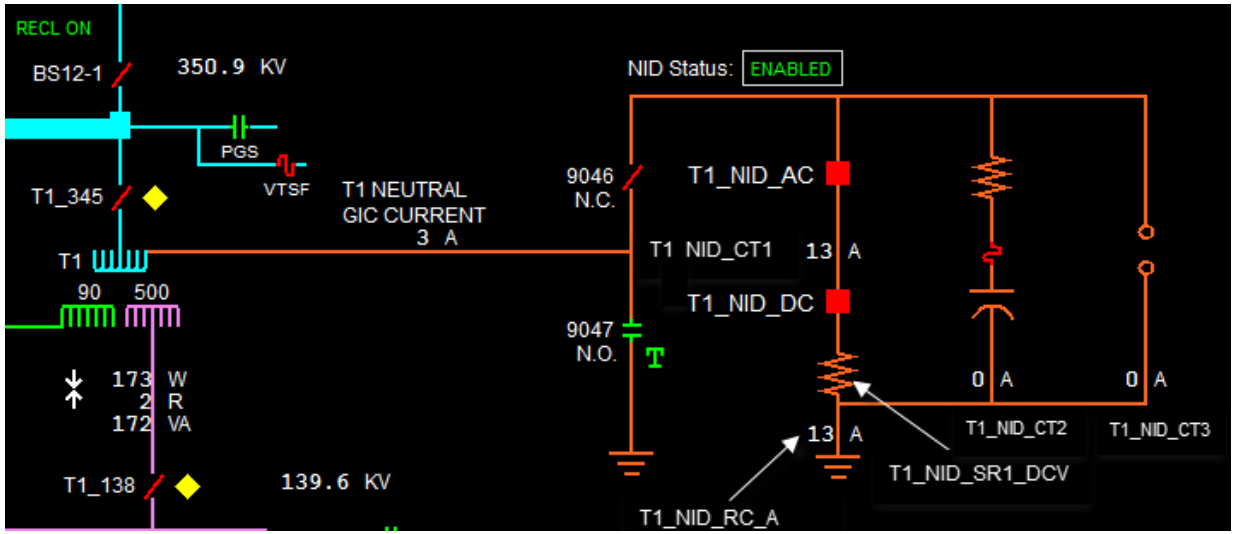

June 22, 2015 Operation

- GIC > 5 A for 5 Seconds Blocking Mode Triggered
- Out of Blocking Mode After 10 Minutes if V < 8 V

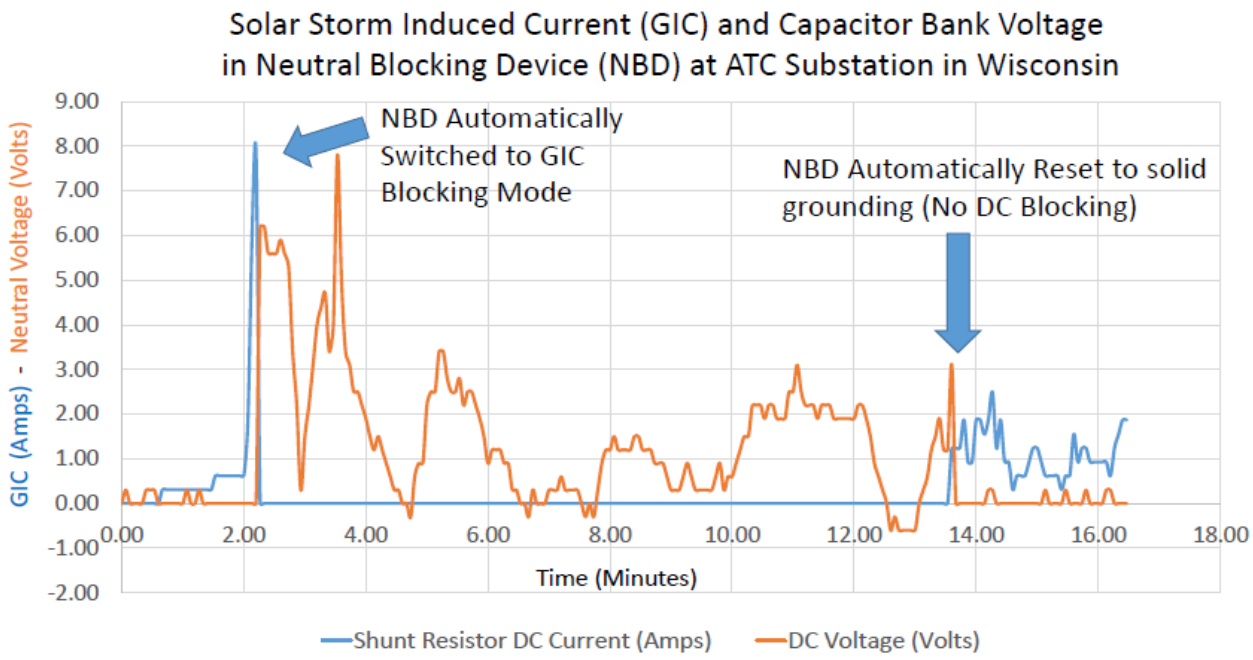

14 Automatic Operations June 22-23

- **Initial V and I Settings Low for Test Purposes**

Date (m/d/yr)	GMD Storm K-Index	Time Triggered into Protection Mode (CST)	Protection Mode Duration (minutes)
6/22/2015	Kp=7	13:34:00	11
“	“	14:51:36	10
“	“	15:02:12	“
“	“	15:17:48	“
“	“	22:21:09	“
“	“	22:31:17	“
“	“	22:44:30	“
“	“	22:55:30	“
“	“	23:05:46	“
“	“	23:46:37	“
6/23/2015	“	00:09:58	“
“	“	00:20:50	“
“	“	00:32:02	“
“	“	00:51:57	“

June 22, 2015, K8, 10:00-11:30 PM

- ATC Monitored Neutral Currents
- NBD Only In Service When Criteria Met

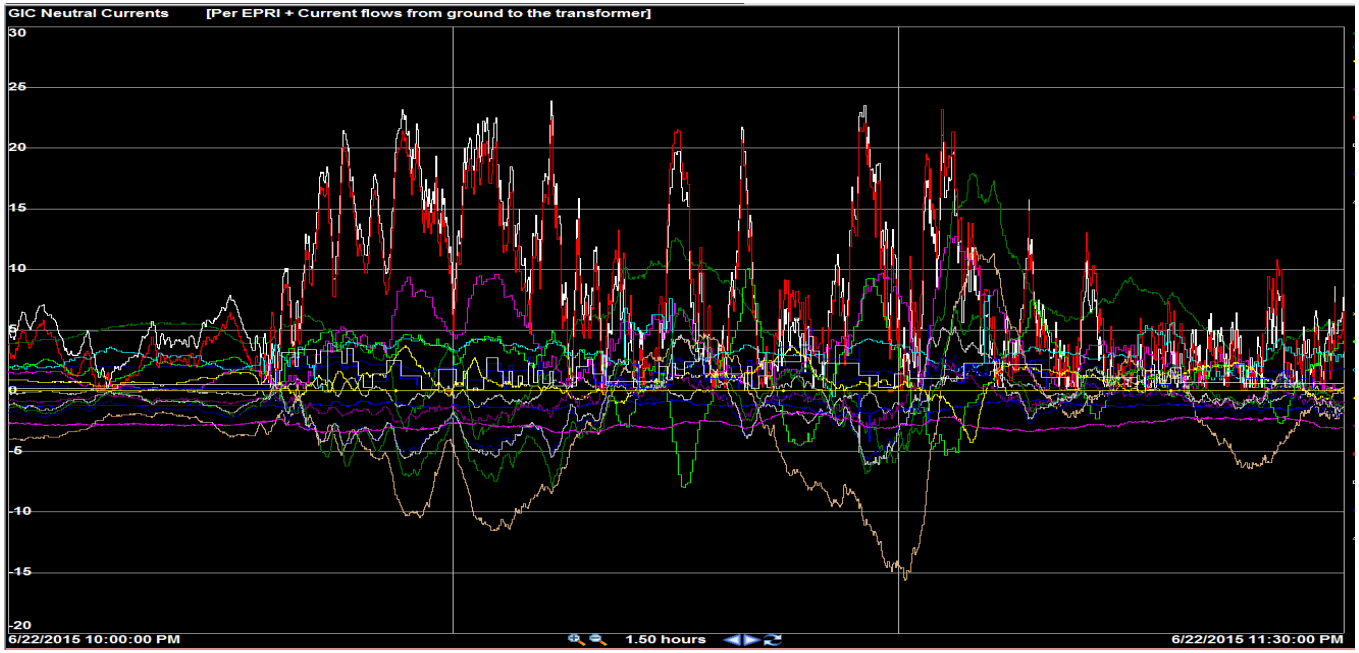

July 2016 to Sept. 2017 Operations

- **Blocking Duration Increased from 10 to 60 Minutes**

Date (m/d/yr)	GMD Storm K-Index	Time Triggered into Protection Mode (CST)	Protection Mode Duration (minutes)
7/19/2016	Kp=6	18:51:04	60
“	“	20:11:32	“
3/1/2017	“	18:08:52	“
“	“	23:59:24	“
5/27/2017	“	22:47:00	“
7/16/2017	“	14:45:24	“
9/7/2017	Kp=7	18:01:09	“
“	“	20:20:04	72
9/8/2017	“	07:20:18	60
“	“	08:29:40	“
“	“	09:35:24	“
“	“	10:42:44	“

May 27, 2017, No “Whack-a-Mole”

- **GIC Drop at NBD Location – No Increase Elsewhere**

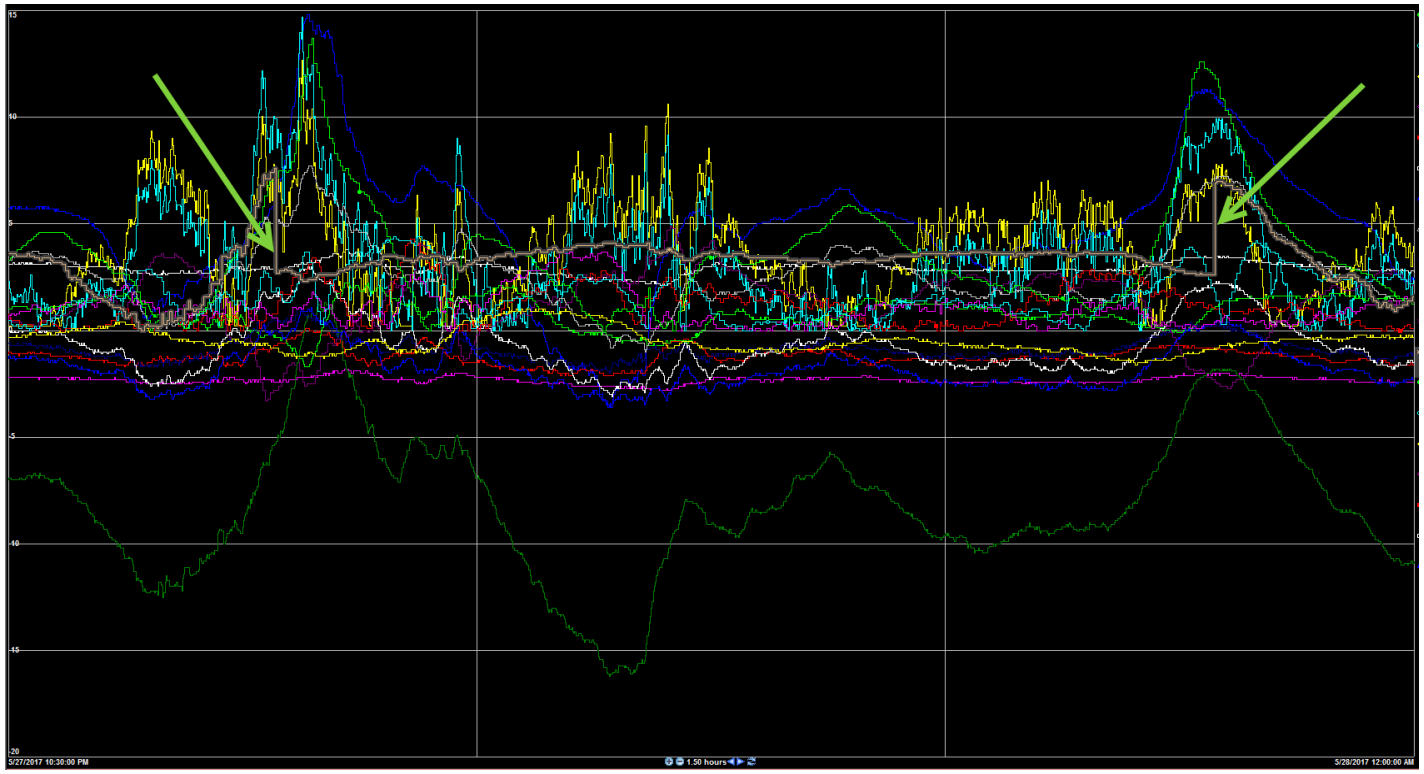

NBD Operational Experience

- Device Is Operating as Designed
  - Blocks GIC Preventing Adverse Effects
  - Missed Some Storms for Station Equipment Outages Not Related to NBD
- Taking NBD Out of Service Straightforward
- No Need to Adjust Relays or Other System Equipment
- Low Maintenance